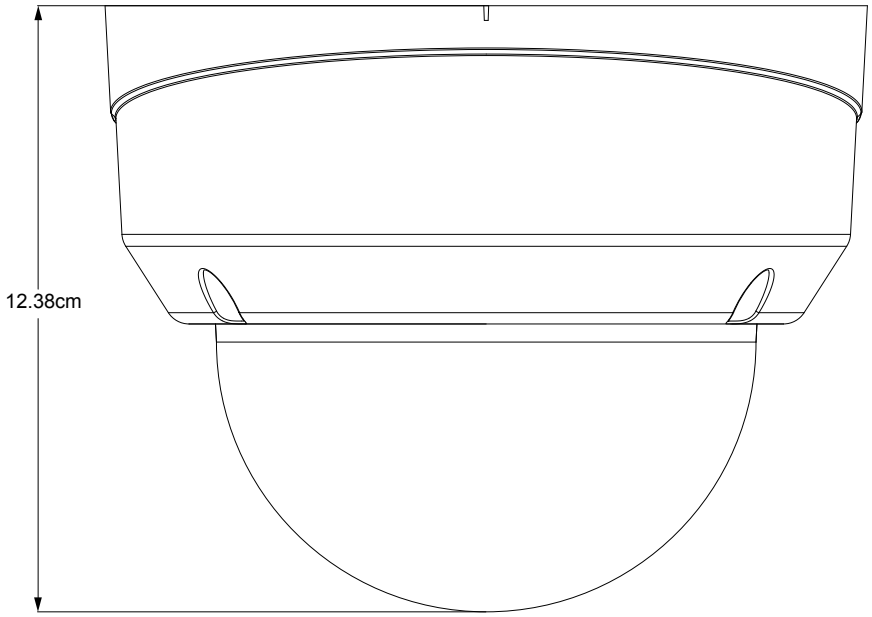
12.38cm

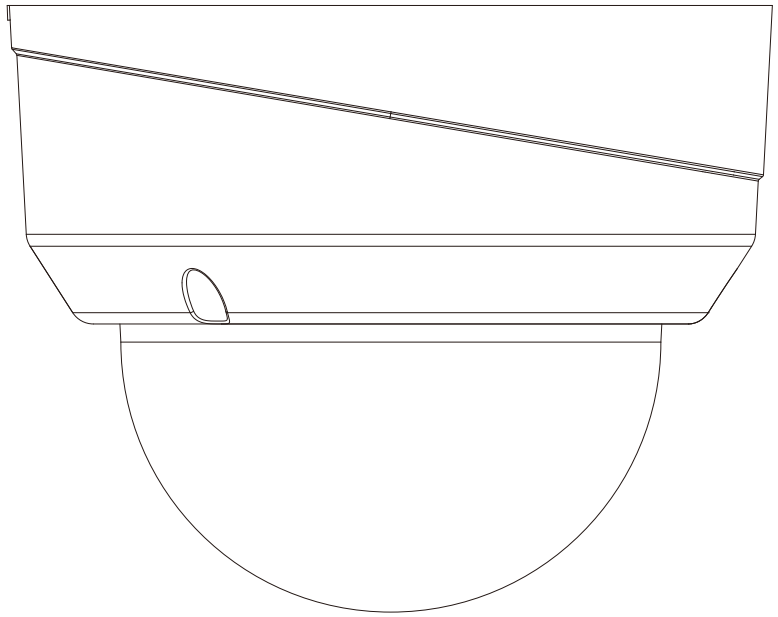

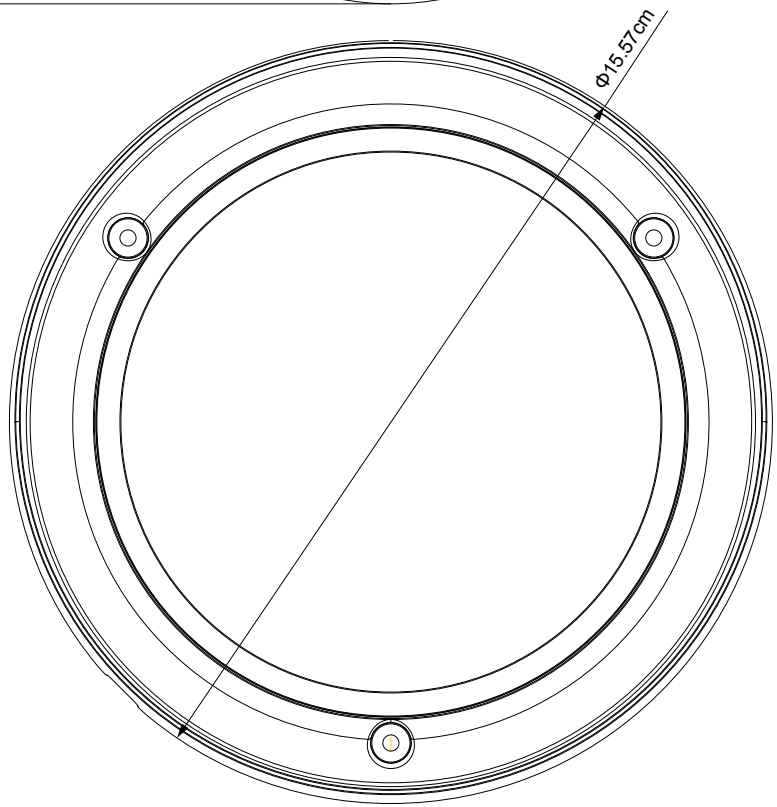
Φ15.57cm

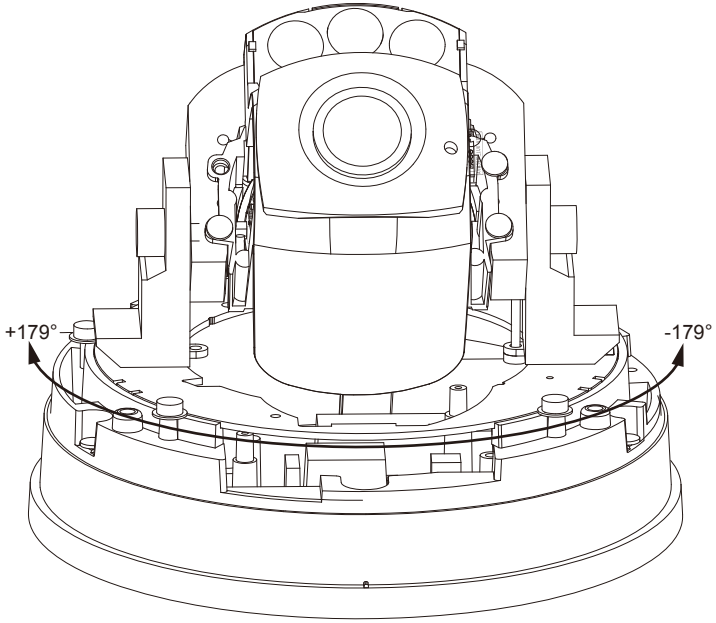
+179°
-179°

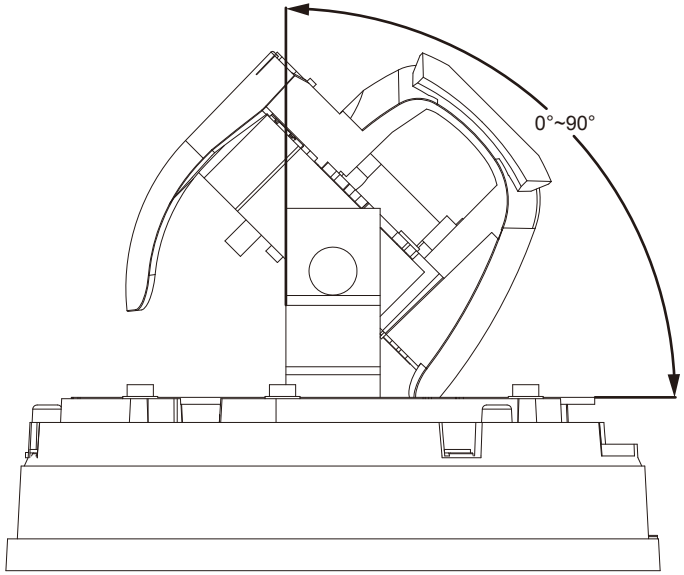
0°~90°

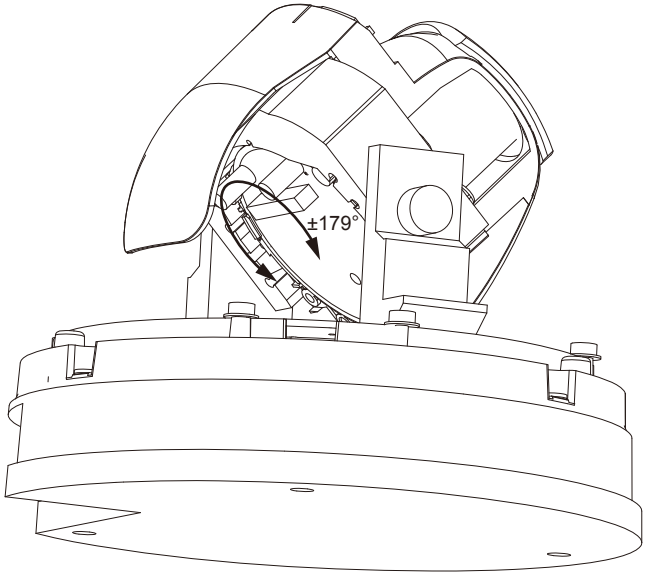
±179°